DIGITAL PIANO USER MANUAL

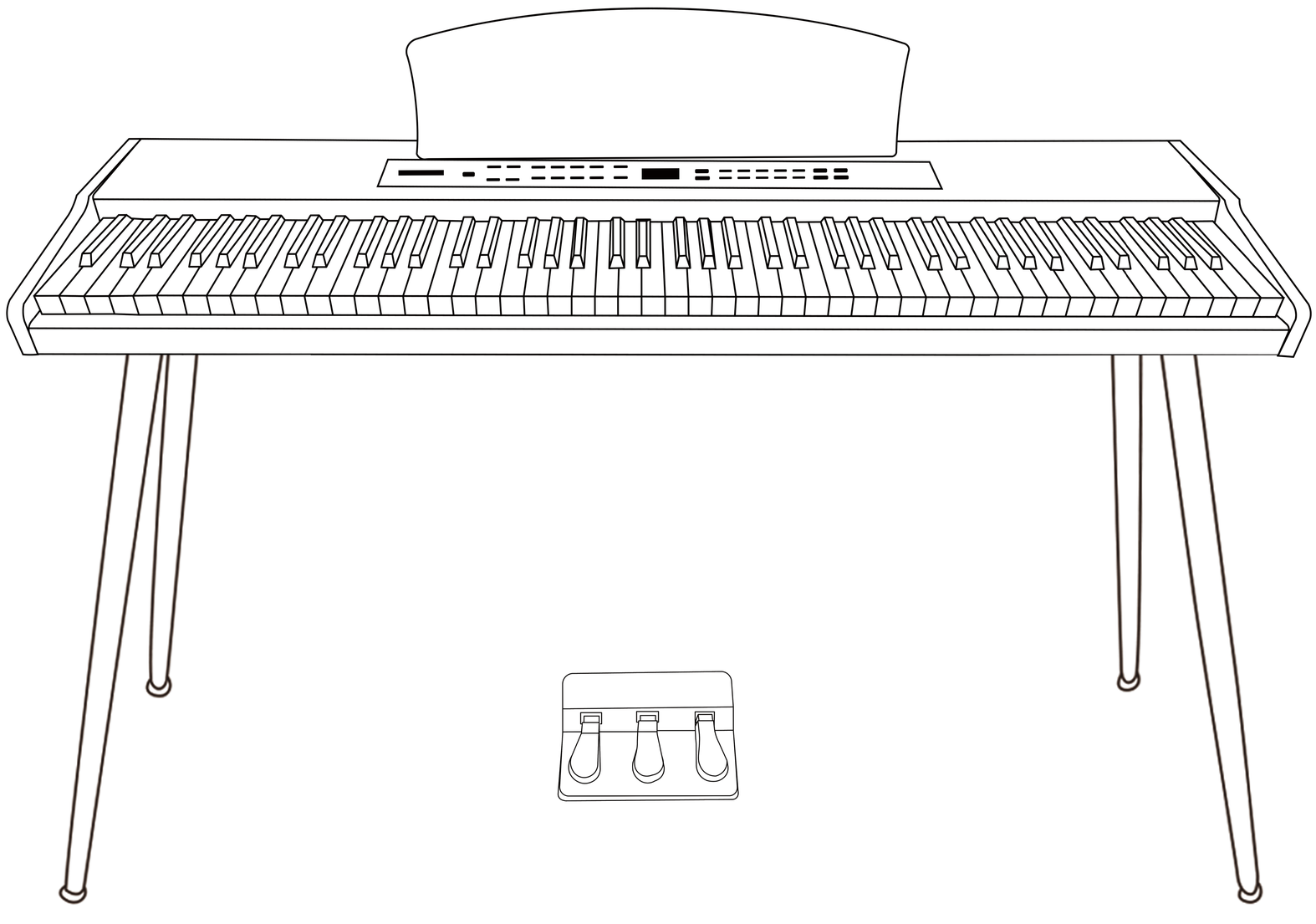

Function introduction

Thank you for purchasing this digital piano from our company. This product is elegant and exquisite, and is a perfect combination of contemporary new electronic technology and traditional musical instruments.

●Before using this instrument, you must read this manual in detail.

Musical Instrument Parameters

Keys: 88-key hammer action keyboard	Pitch: <3 cents
Range: A1~C9	Output power: >4Ω/10W×2
Style: Portable digital piano	Power parameters: AC 100-240V~50/60 HZ 1.5A DC 5V/2A ⎓

- Keyboard: 88-key hammer action keyboard (including black keys).
  Voice range: A1 ~ C9.
- Tone: 128 tones.
- Rhythm: 128 rhythms.
- Demonstration songs: 80 songs.
- Rhythm function, dual keyboard function, demonstration song function, recording and playback function, chord function, metronome function, Bluetooth function.
- Hardware: 64 chords, with 2-way 16-bit DAC output, built-in amplifier circuit.
- Output function: three-digit digital display, function button light display.
- Single pedal/three pedals

Notice!

- This product is an electronic and electro-acoustic musical instrument. It is normal for the speaker or earphone to have a little current sound after power is turned on.

  During use, please stay away from "radios, televisions, antenna receivers, routers, refrigerators, electrical appliances with motors and other radio frequency electrical interference sources"

List

Function introduction ---------- 1

List ---------- 2

Installation guide ---------- 3

Functional operation instructions ---------- 4

Tone table ---------- 5

Rhythm table ---------- 8

Demo song ---------- 9

Product maintenance ---------- 10

Safety precautions ---------- 11

Warranty card ---------- 15

Installation guide

Notice!

- In order to use this device correctly, please install it according to the installation guide steps and carefully read the "Safety Precautions" in the "User Manual" before use.
- This product needs to be installed by an adult, do not let minors install it independently!

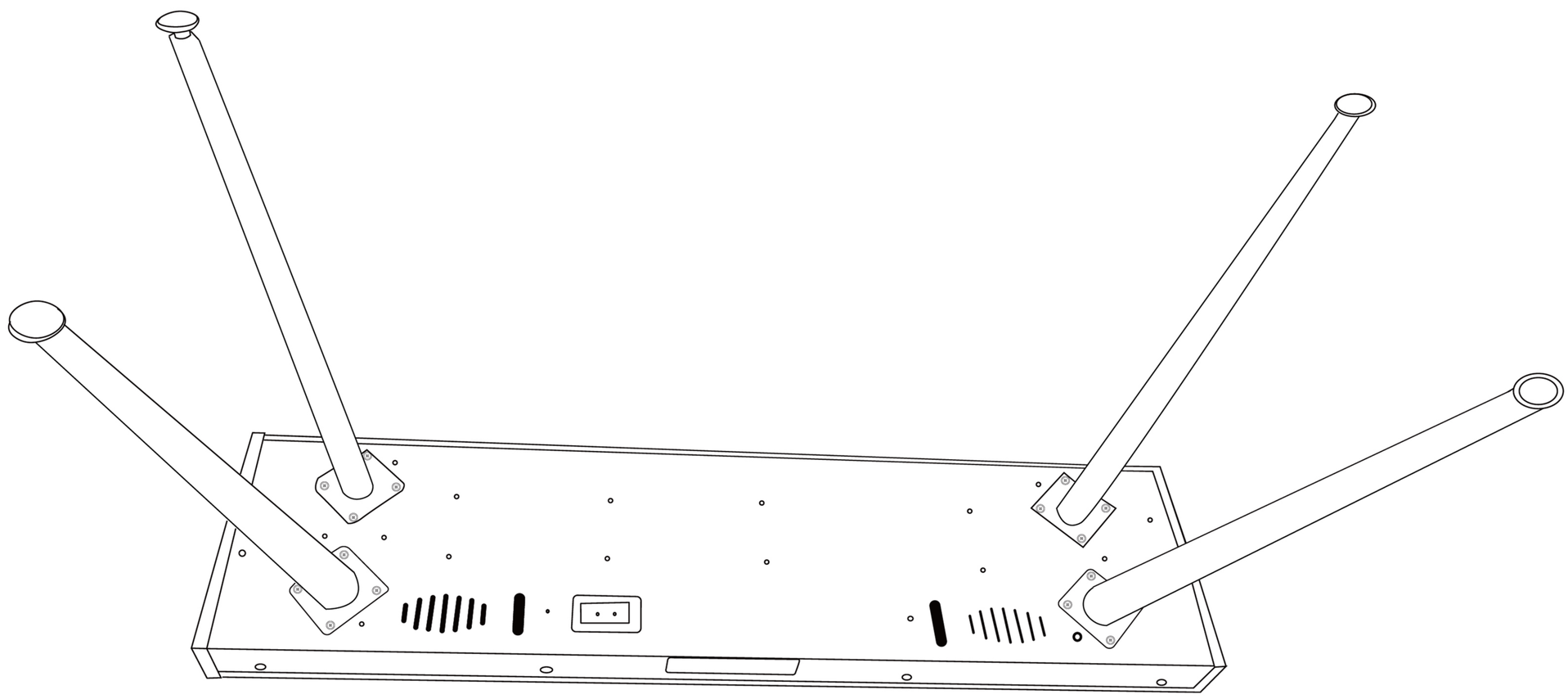

◆**Screw**（M6x12=16）

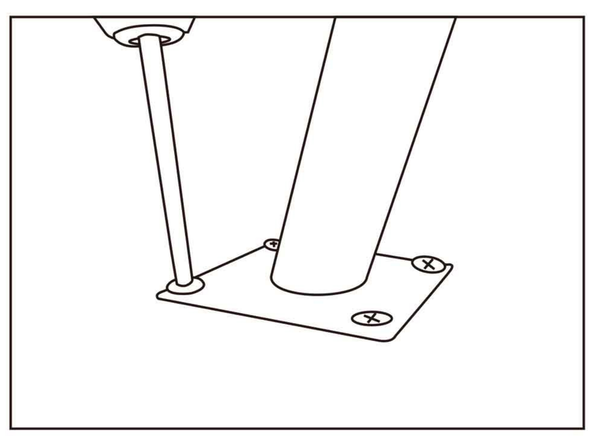

Socket Panel

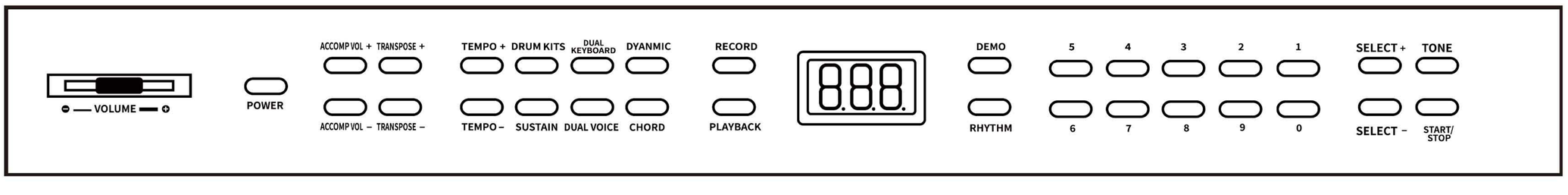

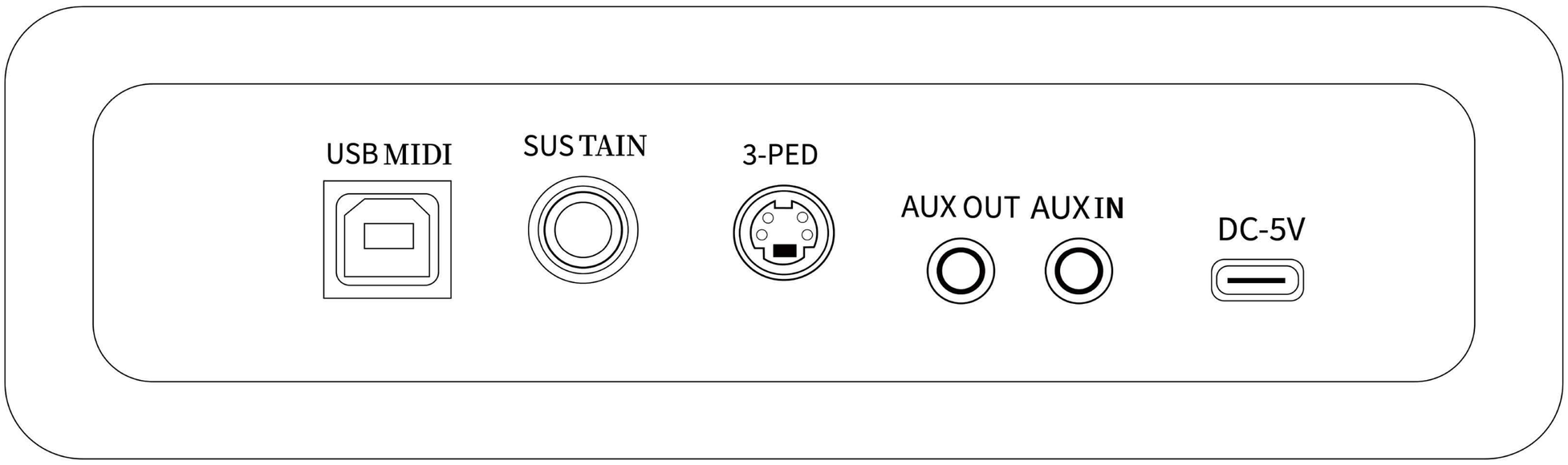

Functional operation instructions

■Playing (Tone) Mode:
◆When the machine is turned on, it automatically enters the playing (Tone) mode, and the Tone light is on.
◆You can select the playing tone by rotating the encoder switch.
■Rhythm Mode:
◆Press the [Start/Stop] key/[Rhythm] key, the system enters the rhythm mode and plays the rhythm, and the rhythm light is on.
◆You can select the rhythm track by rotating the encoder switch, and the track ranges from 0-127.
◆Press the [Synchronize] key to start the rhythm playback by pressing the piano key.
◆In this mode, press the [Tone] key, the rotary encoder switch can switch the tone, and the tone light is on.
To switch the rhythm again, press the [Rhythm] key.
■Dual Keyboard Mode
◆Press the [Dual Keyboard] key to turn on/off the dual keyboard mode, and the dual keyboard light ison/off.
◆In this mode, the range of the piano keys is divided into two intervals: A2-B5 and C4-C8.
■Demo Song Mode:
◆Press the [Demo Song] key, the system plays all the demo songs, and the demo song light is on. Press the [Start/Stop] button to stop the demo song, and the demo song light will go out.
◆The rotary encoder switch can be used to select the demo song, from 0 to 79.
◆In this mode, press the [Tone] button, the rotary encoder switch can switch the tone, and the tone light will light up. To switch the rhythm again, press the [Rhythm] button.
■Recording related functions:
◆Press the [Record] button to enter the recording mode, and the recording light will light up, and the digital tube will display [REC].
◆The recording function uses multi-channel real-time recording to record notes.
◆After entering the recording mode, the user can play the keys at will, and the system will automatically record the keys played by the user faithfully. When the recording block planned by the system is full, the digital tube will display [FUL] to indicate that the record is full.
◆Press the [Play] button to realize the recording playback function, and the playback light will light up . However, this playback function is considered valid only when there are notes recorded. After the playback ends, it automatically returns to the original state.
◆You can select the playback tone during playback.
◆After re-recording and system reset, the recorded notes will be automatically refreshed.
■Chord mode
◆When the system is playing the rhythm, press the [Chord] key to enter the chord mode, and the chord light will light up.
◆Chord function: Press the keys in the A1~F#4 range to play the chords that match the rhythm, and the tone of the chord changes with the pitch of the keys. ◆In chord mode, press the [Chord] key to turn off the chord, and the chord light will turn off.
■Velocity control function:
◆Press the [Velocity] key to turn the velocity on or off, and the velocity light will turn on/off. The velocity is on when the power is turned on.
■USB-MIDI-IN-OUT function:
◆Connect to a computer or tablet via a USB cable for multimedia interaction.
■Bluetooth function:
◆In Bluetooth mode, the connected Bluetooth device can be used as a Bluetooth speaker.
◆Can be connected to the teaching APP for teaching.
■Other functions:
◆The metronome is a beat auxiliary function. Press the [Metronome] button to cycle through the beats, and the metronome light will light up.
The metronome has 4 variations, in the order of 2/4 beats → 2/4 split beats → 3/4 beats → 3/4 split beats.
◆Press the [Volume] button to turn on the volume light, and rotate the coding switch to select the volume.

Appendix

No.	English name	034	Electric Bass(pick
Tone: Piano		035	Fretless Bass
	Piano	036	Slap Bass
000	Piano 1	037	Slap Bass
001	Piano 2	038	Synth Bass
002	Piano 3	039	Synth Bass
003	Honky-Tonk Piano		String solo
004	Rhodes Piano	040	Violin
005	Chorused Piano	041	Viola
006	Harpsichord	042	Cello
007	Clavinet	043	Contrabass
	Percussion	044	Tremolo Strings
008	Celesta	045	Pizzicato Strings
009	Glockenspiel	046	Orchestral Harp
010	Music Box	047	Timpani
011	Vibraphone		String Ensemble
012	Mar imba	048	String Ensemble
013	Xy lophone	049	String Ensemble
014	Tubular Bells	050	SynthStrings
015	Santur	051	SynthStrings
	Organ	052	Choir Aahs
016	Hammond Organ	053	Voice Oohs
017	Percussive Organ	054	Synth Voice
018	Rock Organ	055	Orchestra Hit
019	Church Organ		Brass instruments
020	Reed Organ	056	Trumpet
021	Accordion	057	Trombone
022	Harmonica	058	Tuba
023	Bandoneon	059	Muted Trumpet
	Guitar	060	French Horn
024	Acoustic Guitar(nylon)	061	Brass Section
025	Acoustic Guitar(steel)	062	Synth Brass 1
026	Electric Guitar(jazz)	063	Synth Brass 2
027	Electric Guitar(clean)		Reed instrument
028	Electric Guitar(muted)	064	Soprano Sax
029	Overdriven Guitar	065	Alto Sax
030	Distortion Guitar	066	Tenor Sax
031	Guitar Harmonics	067	Baritone Sax
	Bass	068	0boe
032	Acoustic Bass	069	English Horn
033	Electric Bass(finger)	070	Bassoon

Appendix

071	Clarinet	107	Koto
	Wind instrument	108	al imba
072	Piccolo	109	Bagpipe
073	F lute	110	Fiddle
074	Recorder	111	Shana
075	Pan Flute		Percussion
076	Bottle Blow	112	Tinkle Bell
077	Skakuhachi	113	Agogo
078	Whistle	114	Steel Drums
079	Ocarina	115	Woodblock
	Synthetic lead	116	Taiko Drum
080	Lead 1(square)	117	Melodic Tom
081	Lead 2(sawtooth)	118	Synth Drum
082	Lead 3(calliope lead)	119	Reverse Cymbal
083	Lead 4(chiff lead)		Sound effects
084	Lead 5(charang)	120	Guitar Fret Noise
085	Lead 6(voice)	121	Breath Noise
086	Lead 7(fifths)	122	Seashore
087	Lead 8(bass+lead)	123	Bird Tweet
	Synthetic Soft	124	Telephone Ring
088	Pad 1(new?age)	125	Helicopter
089	Pad 2(warm)	126	Applause
090	Pad 3(polysynth)	127	Gun shot
091	Pad 4(choir)		
092	Pad 5(bowed)		
093	Pad 6(metallic)		
094	Pad 7(halo)		
095	Pad 8(sweep)		
	Synthetic effects		
096	FX 1(rain)		
097	FX 2(soundtrack)		
098	FX 3(crystal)		
099	FX 4(atmosphere)		
100	FX 5(brightness		
101	FX 6(goblins)		
102	FX 7(echoes)		
103	FX 8(sci-fi)		
	Tribal instrument		
104	Sitar		
105	Banjo		
106	Shami sen		

No.	English name	039	2polka
Rhythm		040	1popswing
000	1beguineswing	041	2Easyswing
001	2beguin	042	3softswing
002	3beguine	043	1rock
003	1pophit	044	2rock
004	2pop	045	3rock
005	3popmalay	046	4Airyrock
006	bossanova	047	5heartrock
007	1disco	048	6rock&rol l
008	2disco	049	7urban
009	3Bluegrassdisco	050	1ballad
010	1waltzl	051	2jazzbal lad
011	2waltzl	052	30.bal lad
012	3Trueballadwaltz	053	4J.ballad
013	4bossawal tz	054	560Slowbal lad
014	5Fasywaltz	055	6pianoBallad
015	6shufflewaltz	056	750sbal lad
016	7Reggaewal tz	057	Snakebase
017	8Rhumbawaltz	058	1Happyblues
018	1march	059	201dblues
019	2march	060	3bluegras
020	1rhumba	061	1boodie
021	2rhumba	062	2boodie
022	1slow	063	3boodie
023	2slow	064	1shuffle
024	1discocha	065	2shuffle
025	2guaracha	066	3Dreamshuffle
026	3charl	067	4countryshuffle
027	1 samba	068	5Quickshuffle
028	2samba	069	6Reggaeshuffle
029	1ubminimal	070	1R&B
030	18bit	071	1Reggae
031	28bit	072	2Reggae
032	116bit1	073	3reggae
033	216bit2	074	1Salsa
034	3Ballad16T	075	2salsa
035	4country16T	076	3salsa
036	1Tango	077	1tecno
037	2tango	078	2tecno
038	1Polka	079	1funky

080	2funky	104	4Destiny
081	1dixie	105	5Comedy
082	2dixie	106	6drive
083	1foxtrot	107	7Liquidnova
084	2foxtrot	108	8KIndustrialfolk
085	1R.roll	109	9slowpure
086	2R.roll	110	10simpleJam
087	1fastbeat	111	11synthethix
088	2Quickbeat	112	12feel
089	3smoothbeat	113	13Accelerate
090	4Squarebeat	114	14Beachnight
091	5eurobeat	115	15Irish
092	Alphadance	116	16Tarantella
093	2Betadance	117	17bigband
094	3dreamdance	118	18dandut
095	4dance1	119	19fusior
096	5dance2	120	20horse2
097	6dance3	121	21keron
098	rap	122	22latin
099	1thevi llage	123	23mambo
100	2countryshuffle	124	24newage
101	lelectrickeys	125	25slowrc1
102	2darkkeys	126	26soul
103	3Easywa lk	127	27twist

No.	English name
Demo Songs	
000	Seven Friends
001	Breezes into Pieces
002	999 roses
003	Yesterday's Glitter
004	Marry Me Today
005	Today is your birthday, my China
006	This Precious Night
007	start over
008	May we all be blessed with longevity
009	excuse
010	A Chinese Ghost Story
011	The story of time
012	Orchid Pavilion Preface
013	Actually, I don't want to leave
014	Night of Military Port
015	Where can I find such a good person
016	Creating Romance
017	Shear The Love
018	courage
019	ten years
020	there is only you in my heart
021	Thousand Years of Love
022	thousands of miles away
023	iron box of an island
024	Casablanca
025	Carmen Overture
026	Snowy hair
027	Crying Mary
028	tunnel warfare
029	Superwoman
030	Love you one more day
031	Big City Small Love
032	Say You Will
033	Providence
034	sisters
035	The Lonely Northern Hemisphere
036	Fables
037	sorry but i love you
038	Love For You Never Ends
039	Love Song of Kangding
040	Not opening the mouth
041	Love is the answer
042	soldier
043	When I know you love
044	When Love Takes Over
045	Past wind
046	Smirk
047	Romance in the Rain
048	Of unwillingness
049	Sing if you want
050	My dear
051	I want to find you
052	A woman's escort
053	refuse to play again
054	let go
055	walk
056	Broken string
057	Break point
058	Never Ending Past Love
059	It Will Be Alright
060	Over the moon
061	piece
062	My beloved Hometown
063	Wild City
064	Sweet honey
065	Absolutely Infatuated
066	Short hair
067	Pray
068	Wishing You Peace
069	Rice fragrant
070	Simple love
071	At least you
072	Flowering season
073	Entering a new era
074	station
075	Athletes march
076	Edelweiss
077	Wind flower in the rain cloud
078	Fatal Fury Special
079	Poisonous perfume

Product maintenance

Careful maintenance and protection of this product plays an important role in prolonging the service life of the product and reducing failure.

1 AVOID HEATING,DAMPNESS OR DIRECT SUNLIGHT

Do not over expose the product to direct sunlight or place it near air condition or extremely hot place.

2 DO NOT USE NEAR THE TV OR RADIO.

This product may cause video or audio interference to the reception of TV and radio. If this happens,the product should be removed from the TV or radio.

3 NO PAINT,DILUENT OR SIMILAR CHEMICALS SHALL BE USED FOR CLEANING.

Clean the product with a soft cloth wetted with weak water solution and neutral detergent. Soak the cloth in a solution and wring it dry until it approaches drying.

4 DO NOT SHAKE,AVOID COLLISION

When moving,the product should be handled carefully and lightly. Violent vibration and collision are strictly prohibited in order to avoid damage to the shell or internal electronic components.

Safety Precautions

POWER SUPPLY

This product can be powered by standard indoor wall sockets.Please only use the power cord specified in this product.When not in use,please turn off the power supply.
When not in use for a long time, pull out the power cord and keep it properly.

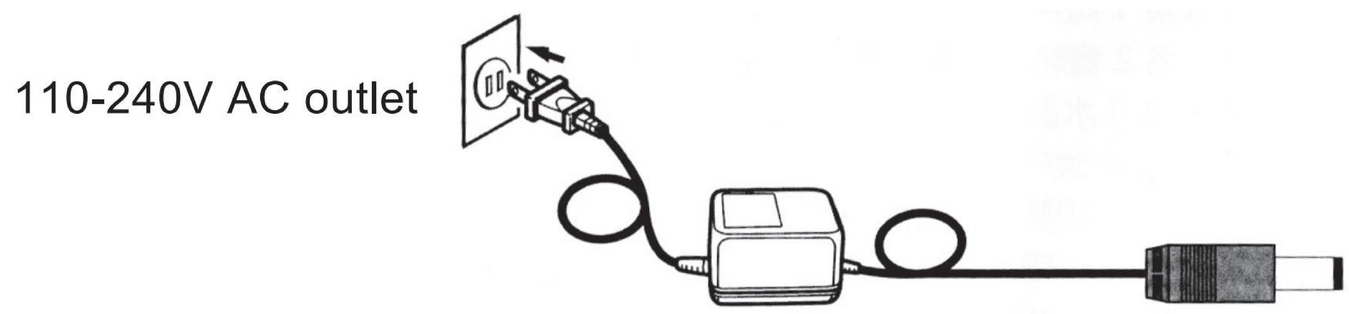

MARKING MAP

To ensure that you use this product safely and correctly,to prevent harm to users and others and financial damage, this manual and products are marked with a series of safety signs.The various signs and their meanings are as follows:

WARNING

This sign indicates that there is a potential risk of death or serious injury if this mark is ignored and the product is mishandled.

BE CAREFUL

This sign indicates that there is a potential danger of injury to personnel or other financial damage if this sign is ignored and the product is operated incorrectly.

EXAMPLE OF LOGO

This triangle sign()indicates what users should pay attention to.(The left picture shows a cautious electric shock)
A circular sign(C)with an oblique line indicates prohibitions.The icons in or beside the logo indicate the contents specifically prohibited.(No disassembly is allowed on the left)
Black dots(·)indicate what must be observed.The diagrams in this sign indicate the contents of the specific matters that must be observed.(The left picture shows that the power plug must be pulled out of the socket)

Warn

Smoke, odor, overheating

When the product emits smoke, smells, or is overheated, continued use may cause fire and electric shock. When the above situation occurs, the following operations should be performed immediately.

1. Turn off the power.
2. Unplug the plug from the power socket.
3. Contact your dealer.

Power cable

Improper use of the power cord may cause fire and electric shock hazards. The following precautions must be observed.

You must use the power cord specified for this product.

You must use an AC power source whose output voltage is within the rated voltage range for household use.

Do not overload the power outlet or power extension cord.

Improper handling of the power cord may result in damage or breakage, resulting in fire and electric shock hazards. The following precautions must be observed.

Do not place heavy objects on the power cord or expose it to heat.

Do not attempt to modify or bend the power cord excessively.

Do not twist or pull on the power cord.

If the power cord or plug is damaged, replace the power cord with the same specification and type.

Do not touch the power cord and plug with wet hands, otherwise there is a risk of electric shock.

Use the power cord in a place where water will not splash. Water poses a risk of fire and electric shock.

Do not place a vase or any other container of water on this product. Water poses a risk of fire and electric shock.

Do not allow minors to unplug or touch the power cord or connection board, as minors do not have the knowledge of electricity safety and there is a risk of electric shock.

Notice

Improper use of the power cord may cause fire and electric shock hazards. The following precautions must be observed.

Do not place the power cord near a stove or other heat source.

Do not pull on the power cord when unplugging it from the electrical outlet. The plug body must be grasped.

The power cord plug must be inserted all the way into the power socket.

Make sure the power is off before connecting or disconnecting the power cord.

Unplug the power cord from the wall outlet during a thunderstorm or before going on a trip or other extended absence.

At least once a year, unplug the power cord from the wall outlet and clean away any accumulated dust from around the plug.

Safety Precautions

Do not dispose of this product

Do not place this product in fire. Otherwise, the wooden products will burn and their internal electronic components will explode, posing a risk of fire and personal injury.

Water and foreign matter

Water, other liquids and (metal pieces, etc.) entering this product may cause fire and electric shock. When the above situation occurs, the following operations should be performed immediately.

1. Turn off the power.
2. If the power cord is being used for power, unplug it from the wall outlet.
3. Contact your dealer.

Dismantling and rebuilding

Do not disassemble or modify this product in any way . Otherwise,there is a risk of electric shock, burns or other personal injuries. Entrust all internal inspections , adjustments and maintenance to your dealer.

Dropped or hit

Continuing to use this product after it has been dropped or damaged by a strong impact may cause fire and electric shock. When the above situation occurs, the following operations should be performed immediately.

1. Turn off the power.
2. If the power cord is being used for power, unplug it from the wall outlet.
3. Contact your dealer.

Plastic bag

Do not let anyone put the plastic bag used to package this product over their head or put it in their mouth, otherwise there is a risk of suffocation. Families with young children should pay special attention.

Keep your distance from this product and stand

Climbing up the piano body or its stand may cause it to tip over or be damaged. Families with young children should pay special attention.

Laying

Avoid placing this product on uneven surfaces or any other unstable location. This may cause the product to fall and cause personal injury.。

Product movement

Before moving this product, you must unplug the power cord from the wall outlet and disconnect all other cables and cords. Otherwise, the wire may be damaged,
resulting in the risk of fire and electric shock.

Clean

Before cleaning this product, you must unplug the power cord from the wall outlet, otherwise there is a risk of fire and electric shock.

Interface

Only specified equipment and devices may be connected to the interfaces of this product. Connecting unspecified equipment or devices may cause fire and electric shock hazards.

Location Selection

Avoid placing this product in the following places. Otherwise, there is a risk of fire and electric shock.

Places with high temperature or dust.

Kitchen or other places with fumes.

Places exposed to direct sunlight or any other place where this product will generate high temperatures.

Volume

Do not play music at high volume for a long time. Be especially aware when using headphones that excessive volume can damage your hearing.

Heavy objects

Do not place heavy objects on this product. Otherwise, the top of the product will be too heavy, causing the product to tip over or the objects on it to fall, posing a risk of personal injury.

Proper assembly of the stand

Improper assembly of the stand may cause it to tip over , causing the product to fall, posing a risk of personal injury. Therefore, assembly must be carried out according to the instructions in the instructions provided with it to ensure that this product is properly installed on its stand.

Fuse replacement

If the fuse is blown, there may be a short circuit or unstable voltage inside the product, which must be identified and replaced by professionals, otherwise there is a risk of fire and electric shock.

Sicherheitsvorkehrungen

Entsorgen Sie dieses Produkt nicht

Legen Sie dieses Produkt niemals ins Feuer. Sonst wird es so sein
Verursacht Verbrennungen von Holzprodukten und deren internen elektronischen Bauteilen
Das Produkt kann explodieren und die Gefahr von Bränden und Verletzungen verursachen.

Wasser und Fremdkörper

Wasser, andere Flüssigkeiten und (Metallteile usw.) gelangen hinein Bei diesem Produkt besteht Brand- und Stromschlaggefahr. aus Wenn die obige Situation eintritt, sollten die folgenden Vorgänge sofort ausgeführt werden.
1. Schalten Sie den Strom aus.
2. Wenn Sie das Netzkabel zur Stromversorgung verwenden Um es mit Strom zu versorgen, schließen Sie es an die Steckdose an Ziehen Sie den Stecker heraus.
3. Kontaktieren Sie Ihren Händler

Demontage und Neuaufbau

Zerlegen Sie dieses Produkt niemals in irgendeiner Weise seine Transformation. Andernfalls kann es zu Stromschlägen, Verbrennungen oder Ähnlichem kommen
Es besteht die Gefahr von Personenschäden. Alle internen Inspektionen sollten durchgeführt werden
Überlassen Sie Inspektion, Einstellung und Wartung Ihrem Händler.

Fallengelassen oder getroffen werden

Dieses Produkt wurde fallen gelassen oder starken Stößen ausgesetzt. Die weitere Verwendung nach einer Beschädigung kann zu Brand- und Stromschlaggefahr führen. Wenn die obige Situation eintritt, sollten die folgenden Vorgänge sofort ausgeführt werden.
1. Schalten Sie den Strom aus.
2.Wenn Sie das Netzkabel verwenden Strom, schließen Sie die Steck es aus.
3. Kontaktieren Sie Ihren Händler.

Plastiktüte

Erlauben Sie niemandem, die Plastikverpackung zu entfernen, in der dieses Produkt verpackt ist. Legen Sie den Stoffbeutel auf Ihren Kopf oder stecken Sie ihn in den Mund, da es sonst zu Verletzungen kommen kann Erstickungsgefahr: Familien mit kleinen Kindern sollten sich besonders bewusst sein.
Halten Sie Abstand zu diesem Produkt und stehen Sie auf

Das Hochklettern des

Instrumentenkörpers oder seines Ständers kann dazu führen, dass es umkippt oder Familien mit kleinen Kindern sollten besonders auf das Schadensrisiko achten.

Ort

Stellen Sie dieses Produkt nicht auf unebenen Oberflächen auf Oberfläche oder einem anderen instabilen Ort. Sonst wird es so sein
Beim Herunterfallen des Produkts besteht Verletzungsgefahr.

Produktbewegung

Bevor Sie dieses Produkt bewegen, müssen Sie es zunächst von der Wand entfernen Ziehen Sie das Netzkabel aus der Steckdose und ziehen Sie alle anderen Geräte ab Kabel und Verbindungsdrähte. Andernfalls kann die Leitung beschädigt werden, was zur Folge hat Brand- und Stromschlaggefahr.

Sauber

Bevor Sie dieses Produkt reinigen, müssen Sie es zuerst entfernen Ziehen Sie das Netzkabel aus der Steckdose, da es sonst zu einem Brand kommen kann Es besteht Katastrophen- und Stromschlaggefahr.

Schnittstelle

An die Schnittstelle dieses Produkts können nur bestimmte Geräte angeschlossen werden. Ausrüstung und Geräte. Der Anschluss unbeabsichtigter Geräte oder Geräte kann zu Problemen führen kann zu Bränden und Stromschlägen führen.

Standortauswahl

Stellen Sie dieses Produkt nicht an den folgenden Orten auf.
NEIN Es besteht Brand- und Stromschlaggefahr.
Orte mit hoher Temperatur oder Staub.
Küche oder andere Orte mit Dämpfen.
Orte mit direkter Sonneneinstrahlung oder anderen Orten Wo dieses Produkt hohe Temperaturen erzeugt.

Volumen

Spielen Sie Musik niemals über einen längeren Zeitraum mit hoher Lautstärke ab. verwenden
Seien Sie besonders vorsichtig, wenn Sie Kopfhörer verwenden, da eine zu hohe Lautstärke Ihr Gehör schädigen kann.

Schwere Gegenstände

Stellen Sie niemals schwere Gegenstände auf dieses Produkt. Andernfalls wird das Produkt beschädigt Die Oberseite des Produkts ist zu schwer, sodass das Produkt umkippt oder auf Gegenstände fällt. Beim Herunterfallen des Produkts besteht Verletzungsgefahr.

Fachgerechte Montage des Ständers

Eine unsachgemäße Montage des Ständers kann zum Umkippen des Produkts führen Beim Herunterfallen des Produkts besteht Verletzungsgefahr. Deshalb muss es Um dies zu gewährleisten, muss der Zusammenbau gemäß den Anweisungen im beiliegenden Handbuch erfolgen Es wird garantiert, dass dieses Produkt ordnungsgemäß in seiner Halterung installiert ist.

Sicherungswechsel

Wenn die Sicherung durchbrennt, liegt möglicherweise ein Kurzschluss im Inneren des Produkts vor. Bei Störungen im Stromkreis oder bei Spannungsinstabilität ist es notwendig, einen Fachmann zu konsultieren Identifizieren und ersetzen Sie es, andernfalls besteht Brand- und Stromschlaggefahr.

Précautions de sécurité

Ne jetez pas ce produit

Ne placez jamais ce produit au feu. Sinon ce sera Provoque la combustion des produits en bois et de leurs composants électroniques internes
Le produit peut exploser, entraînant un risque d'incendie et de blessures.

Eau et corps étrangers

De l'eau, d'autres liquides et (morceaux métalliques, etc.) entrent Ce produit présente un risque d'incendie et de choc électrique. dehors Lorsque la situation ci-dessus se produit, les opérations suivantes doivent être effectuées immédiatement.
1. Coupez l'alimentation.
2. Si vous utilisez le cordon d'alimentation pour alimenter l'alimentation, branchez-le à la prise murale Débrancher.
3. Contactez votre revendeur

Démantèlement et reconstruction

Ne démontez jamais ce produit de quelque manière que ce soit ou sa transformation. Sinon, un choc électrique, des brûlures ou autres Cela risque de provoquer des blessures. Toutes les inspections internes doivent être Confiez l'inspection, le réglage et l'entretien à votre revendeur.

Tombé ou frappé

Ce produit est tombé ou a été soumis à un fort impact. Continuer à l'utiliser après un dommage peut entraîner des risques d'incendie et de choc électrique. Lorsque la situation ci-dessus se produit, les opérations suivantes doivent être effectuées immédiatement.
1. Coupez l'alimentation.
2. Si vous utilisez le cordon d'alimentation pour l'alimentation, connectez le Débranchez-le.
3. Contactez votre revendeur.

Sac plastique

Ne laissez jamais personne retirer l'emballage en plastique utilisé pour emballer ce produit. Mettez le sac de matériel sur votre tête ou mettez-le dans votre bouche, sinon cela pourrait provoquer Risques d'étouffement Les familles avec de jeunes enfants doivent être particulièrement vigilantes
Gardez vos distances avec ce produit et tenez-vous debout

Grimper sur le corps de

l'instrument ou sur son support peut le faire basculer ou Les familles avec de jeunes enfants doivent accorder une attention particulière aux risques de dommages.

Lieu

Évitez de placer ce produit sur des surfaces inégales surface ou tout autre endroit instable. Sinon ce sera Si le produit tombe, il existe un risque de

Mouvement du produit

Avant de déplacer ce produit, vous devez d'abord le retirer du mur Débranchez le cordon d'alimentation de la prise électrique et débranchez tous les autres Câbles et fils de connexion. Sinon, la ligne pourrait être endommagée, ce qui entraînerait Risque d'incendie et de choc électrique.

Faire le ménage

Avant de nettoyer ce produit, vous devez d'abord retirer le Débranchez le cordon d'alimentation de la prise de courant, sinon cela pourrait provoquer un incendie Risque de catastrophe et de choc électrique.

Interface

Seuls les appareils spécifiés peuvent être connectés à l'interface de ce produit. équipements et appareils. La connexion d'équipements ou de dispositifs involontaires peut provoquer peut provoquer des risques d'incendie et de choc électrique.

Sélection de l'emplacement

Évitez de placer ce produit aux endroits suivants. Non Il existe un risque d'incendie et de choc électrique.
Endroits à haute température ou poussière.
Cuisine ou autres endroits avec des fumées.
Endroits exposés à la lumière directe du soleil ou à tout autre Où ce produit génère des températures élevées.

Volume

Ne jouez jamais de musique à volume élevé pendant de longues périodes. utiliser
Soyez particulièrement prudent lorsque vous utilisez des écouteurs, car un volume excessif peut endommager votre

Objets lourds

Ne placez jamais d'objets lourds sur ce produit. Sinon, le produit Le dessus du produit est trop lourd, ce qui fait basculer le produit ou le laisse tomber sur des objets. Si le produit tombe, il existe un risque de blessure.

Assemblage correct du stand

Un assemblage incorrect du support peut le faire basculer, ce qui entraînerait le produit à Si le produit tombe, il existe un risque de blessure. Il faut donc Il doit être assemblé conformément aux instructions du manuel qui l'accompagne pour garantir que Ce produit est garanti correctement installé dans son support.

Remplacement du fusible

Si le fusible saute, il peut y avoir un court-circuit à l'intérieur du produit. phénomène de circuit, ou instabilité de tension, il est nécessaire de consulter un professionnel Identifiez-le et remplacez-le, sinon il y a un risque d'incendie et de choc électrique.

Warranty regulations

1. If a malfunction occurs due to normal use of this product, you can enjoy days of free warranty service from the date of purchase.
2. If a malfunction occurs during the warranty period, this warranty card and shopping receipt must be presented during repairs.
3. Free warranty will not be provided in the following situations:
A. Damage caused by improper use by the user.
B. Failure caused by irresistible factors such as fire, flood, earthquake, lightning strike, etc.
C. Failure caused by unauthorized disassembly.
4. After the warranty period has expired, our company will be responsible for repairs and will charge a cost.

Repair location: _____

Address: _____

Contact number: _____

	Product certification product name: Digital piano Product number: _____ Date of manufacture: _____ Inspectors: _____